SoundTouch® 130
home theater system

Owner's Guide ▪ Guía del usuario ▪ Notice d'utilisation

Important Safety Instructions

Please read this owner's guide carefully and save it for future reference.

The lightning flash with arrowhead symbol within an equilateral triangle alerts the user to the presence of uninsulated, dangerous voltage within the system enclosure that may be of sufficient magnitude to constitute a risk of electric shock.

The exclamation point within an equilateral triangle alerts the user to the presence of important operating and maintenance instructions in the owner's guide.

WARNINGS:

- To reduce the risk of fire or electric shock, do not expose this product to rain or moisture.
- Do not expose this apparatus to dripping or splashing, and do not place objects filled with liquids, such as vases, on or near the apparatus. As with any electronic products, use care not to spill liquids into any part of the product. Exposure to liquids may create a failure and/or fire hazard.
- Replace only with a AA (IEC LR06) alkaline battery (or batteries).
- Do not place naked flame sources, such as lighted candles, on or near the product.

CAUTIONS:

- Do not make unauthorized alterations to the product; doing so may compromise safety, regulatory compliance, system performance, and may void the warranty.
- Long-term exposure to loud music may cause hearing damage. It is best to avoid extreme volume when using headphones, especially for extended periods.

0-3

WARNING: Contains small parts which may be a choking hazard. Not suitable for children under age 3.

WARNING: This product contains magnetic material. Contact your physician if you have questions on whether this might affect the operation of your implantable medical device.

NOTES:

- The product label is located on the bottom of the console.
- Where the mains plug or appliance coupler is used as the disconnect device, such disconnect device shall remain readily operable.
- This product must be used indoors. It is neither designed nor tested for use outdoors, in recreational vehicles, or on boats.
- The speaker wire and interconnect cables included with the system are not approved for in-wall installation. Please check your local building codes for the correct type of wire and cable required for in-wall installation.

Important Safety Instructions

1. Read these instructions.
2. Keep these instructions.
3. Heed all warnings.
4. Follow all instructions.
5. Do not use this apparatus near water.
6. Clean only with a dry cloth.
7. Do not block any ventilation openings. Install in accordance with the manufacturer's instructions.
8. Do not install near any heat sources, such as radiators, heat registers, stoves, or other apparatus (including amplifiers) that produce heat.
9. Protect the power supply or cord from being walked on or pinched, particularly at plugs, convenience receptacles, and the point where they exit from the apparatus.
10. Only use attachments/accessories specified by the manufacturer.
11. Unplug this apparatus during lightning storms or when unused for long periods of time.
12. Refer all servicing to qualified service personnel. Servicing is required when the apparatus has been damaged in any way: such as power supply or cord is damaged; liquid has been spilled or objects have fallen into the apparatus; the apparatus has been exposed to rain or moisture, does not operate normally, or has been dropped.

Note: This equipment has been tested and found to comply with the limits for a Class B digital device, pursuant to Part 15 of the FCC Rules. These limits are designed to provide reasonable protection against harmful interference in a residential installation. This equipment generates, uses, and can radiate radio frequency energy and, if not installed and used in accordance with the instructions, may cause harmful interference to radio communications. However, there is no guarantee that interference will not occur in a particular installation. If this equipment does cause harmful interference to radio or television reception, which can be determined by turning the equipment off and on, the user is encouraged to try to correct the interference by one or more of the following measures:

- Reorient or relocate the receiving antenna.
- Increase the separation between the equipment and receiver.
- Connect the equipment into an outlet on a circuit different from that to which the receiver is connected.
- Consult the dealer or an experienced radio/TV technician for help.

Changes or modifications not expressly approved by Bose Corporation could void the user's authority to operate this equipment.

This device complies with part 15 of the FCC Rules and Industry Canada license-exempt RSS standard(s). Operation is subject to the following two conditions: (1) This device may not cause harmful interference, and (2) this device must accept any interference received, including interference that may cause undesired operation.

SoundTouch wireless adapter
This equipment should be installed and operated with a minimum distance of 8 in. (20 cm) between this device and your body.

This Class B digital apparatus complies with Canadian ICES-003.

CAN ICES-3 (B) / NMB-3 (B)

This device complies with FCC and Industry Canada RF radiation exposure limits set forth for general population. It must not be co-located or be operating in conjunction with any other antennas or transmitters.

廢電池請回收

Please dispose of used batteries properly, following local regulations. Do not incinerate.

This symbol means the product must not be discarded as household waste, and should be delivered to an appropriate collection facility for recycling. Proper disposal and recycling helps protect natural resources, human health and the environment. For more information on disposal and recycling of this product, contact your local municipality, disposal service, or the shop where you bought this product.

Bose Corporation hereby declares that this product is in compliance with the essential requirements and other relevant provisions of Directive 1999/5/EC and all other applicable
EU directive requirements. The complete declaration of conformity can be found at:
www.Bose.com/compliance

Names and Contents of Toxic or Hazardous Substances or Elements						
	Toxic or Hazardous Substances and Elements					
Part Name	Lead (Pb)	Mercury (Hg)	Cadmium (Cd)	Hexavalent (CR(VI))	Polybrominated Biphenyl (PBB)	Polybrominated diphenylether (PBDE)
PCBs	X	O	O	O	O	O
Metal parts	X	O	O	O	O	O
Plastic parts	O	O	O	O	O	O
Speakers	X	O	O	O	O	O
Cables	X	O	O	O	O	O
This table is prepared in accordance with the provisions of SJ/T 11364. O: Indicates that this toxic or hazardous substance contained in all of the homogeneous materials for this part is below the limit requirement of GB/T 26572.						
X: Indicates that this toxic or hazardous substance contained in at least one of the homogeneous materials used for this part is above the limit requirement of GB/T 26572						

Regulatory Information

Please complete and retain for your records:

Serial numbers can be found on the Acoustimass® module's connector panel and on the packaging for the remote control.

Model number: _____

Module serial number: _____

Remote serial number: _____

Console serial number: _____

Soundbar serial number: _____

Purchase date: _____

We suggest you keep your receipt with this owner's guide.

Date of manufacture: The first bolded digit in the serial number indicates the year of manufacture; "5" is 2005 or 2015.

China Importer: Bose Electronics (Shanghai) Company Limited, Part C, Plan 9, No. 353 North Riying Road, China (Shanghai) Pilot Free Trade Zone
EU Importer: Bose Products B.V., Gorslaan 60, 1441 RG Purmerend, The Netherlands
Taiwan Importer: Bose Taiwan Branch, 9F-A1, No.10, Section 3, Minsheng East Road, Taipei City 104, Taiwan

App Store is a service mark of Apple Inc.
Amazon, Kindle and Fire are trademarks of Amazon, Inc. or its affiliates.
Android and Google Play are trademarks of Google Inc.
Blu-ray Disc™ and Blu-ray™ are trademarks of the Blu-ray Disc Association.
The *Bluetooth*® word mark and logos are registered trademarks owned by Bluetooth SIG, Inc. and any use of such marks by Bose Corporation is under license.

Manufactured under license from Dolby Laboratories. Dolby and the double-D symbol are trademarks of Dolby Laboratories.

For DTS patents, see http://patents.dts.com. Manufactured under license from Digital Theater Systems, INC. DTS, the Symbol, & DTS and the Symbol together are registered trademarks, and DTS Digital Surround is a trademark of DTS, Inc. ©DTS, Inc. All Rights Reserved.

The terms HDMI and HDMI High-Definition Multimedia Interface, and the HDMI Logo are trademarks or registered trademarks of HDMI Licensing LLC in the United States and other countries.

iHeartRadio is a registered trademark of iHeartMedia, Inc.
This product incorporates Spotify software which is subject to 3rd party licenses found here:
www.spotify.com/connect/third-party-licenses.
Spotify is a registered trademark of Spotify AB.
SoundTouch and the wireless note design are registered trademarks of Bose Corporation in the U.S. and other countries.
Wi-Fi is a registered trademark of the Wi-Fi Alliance.
© 2017 Bose Corporation. No part of this work may be reproduced, modified, distributed, or otherwise used without prior written permission.

Contents

About Your SoundTouch® 130 System

System benefits 8
Hardware features 8
SoundTouch® app 8
Unpacking the system 9
Placement guidelines 10
Sample system placement 10

Setting Up the Acoustimass® Module

Attaching the rubber feet to the Acoustimass® module 11
Connecting the Acoustimass® module to power 12

Setting Up the Console

Connecting the console to your TV 13
Using the HDMI™ ARC connector 13
TVs without an HDMI™ ARC connector 14
Connecting the console to other sources 14
Connecting to HDMI™ compatible sources 14
Connecting to non HDMI ™ compatible sources 15
Connecting to audio-only sources 15
Connecting the SoundTouch® wireless adapter 15

Setting Up the Soundbar

Connecting the soundbar 16
Attaching the optional extension feet to the soundbar 17
Wall mounting the soundbar 17

Connecting the System to Power

Connecting the soundbar to power 18
Connecting the console to power 18

Starting Up the System

Installing the remote control's batteries 19
Powering on the system and selecting your language 19
Checking for sound 20

Contents

ADAPTiQ®

Running the ADAPTiQ® audio calibration 21

Setting Up SoundTouch®

Adding the system to your Wi-Fi® network 22
- Download and install the SoundTouch® app 22
- Connect the system to your Wi-Fi network 22

Adding the system to an exisitng SoundTouch® account 22

Using the System

Remote control buttons 23

Programming the universal remote control 24
- Consumer Electronics Control 24
- Test your HDMI™ connected sources for CEC 24
- Program the remote to control your source 25

Source selection 26
- Select a source connected to the Bose® system 26
- Select a source connected to your TV 26

Universal source buttons and console connectors 26

Using the button 27
- SoundTouch® 27
- *Bluetooth* wireless technology 27
- SIDE AUX 27

Adjusting the volume 28

Function buttons 28

Programming a non-Bose® remote control 28

Using SoundTouch®

Accessing SoundTouch® 29
- Using the SoundTouch® app 29
- Using the SoundTouch® source 29
- Getting help 29

Bluetooth®

Pairing a *Bluetooth®* device....30
Connecting to a paired *Bluetooth®* device.... 31
Using the button 31
Using the *Bluetooth* feature on the paired device.... 31

Getting System Information

Using the System menu....32
Error messages 33
Acoustimass® module status indicator 33

Care and Maintenance

Troubleshooting 34
If your console cannot find the Acoustimass® module 37
ADAPTiQ® audio calibration error messages.... 37
Factory reset the system 38
Reset a source button on the remote control....38
Service connectors on the Acoustimass® module....38
Cleaning....39
Customer service....39
Limited warranty 39
Technical information....39

Appendix: Using a Computer for Setup

Important setup information....40
Using a desktop computer for setup 40
Setting up the system using a computer 40

About Your SoundTouch® 130 System

Your SoundTouch® 130 home theater system provides Bose® quality audio for video sources, SoundTouch® and *Bluetooth*® technology. It presents an elegant way to bring clear, room-filling sound streamed wirelessly into any room over your home Wi-Fi® network. With SoundTouch®, you can stream Internet radio, music services and your music library.

If you have Wi-Fi at home, you're ready to enjoy your favorite music in any room you want.

System benefits

- Advanced Bose audio processing provides natural and lifelike sound.
- ADAPTiQ® audio calibration optimizes sound quality.
- Supports Consumer Electronics Control (CEC).
- Enjoy wireless access to Internet radio, music services and your music library.
- Access your favorite music easily with your personalized Presets.
- Wireless setup using your smartphone or tablet.
- Works with your existing home Wi-Fi network.
- Stream music from *Bluetooth* devices.
- Free SoundTouch® app for your computer, smartphone or tablet.
- Simply add additional systems at any time for a multi-room listening experience.
- Wide selection of Bose audio systems lets you choose the right solution for any room.

Hardware features

- Display provides access to system settings and information.
- HDMI™ connectivity allows easy setup and ensures high-quality audio from your connected sources.
- Programmable universal remote can control your TV, cable/satellite box and other connected sources.
- Hideaway wireless Acoustimass® module provides impactful bass sound.
- Speakers can be mounted on the wall (kit available separately).
- SoundTouch® series II wireless adapter enables SoundTouch® and *Bluetooth* on your system.

SoundTouch® app

- Set up and control the SoundTouch® source from your smartphone, tablet or computer.
- Use the SoundTouch® app to easily personalize Presets to your favorite music.
- Explore Internet radio, music services and your music library.
- Pair, connect and play audio from *Bluetooth* devices.
- Manage SoundTouch® settings.

Unpacking the system

Carefully unpack the carton and confirm that the following parts are included:

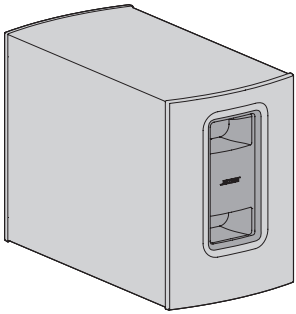

Acoustimass® module

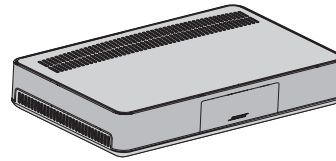

Console

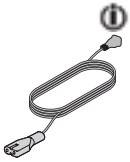

Acoustimass power cord

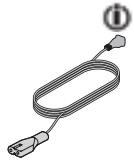

Console power cord

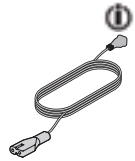

Soundbar power cord

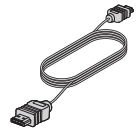

HDMI™ cable

Speaker cable

USB cable

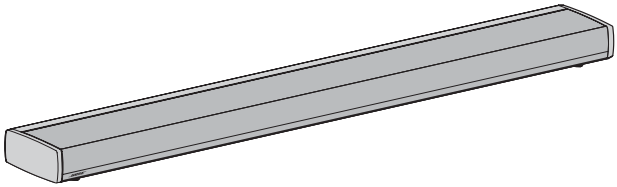

Soundbar

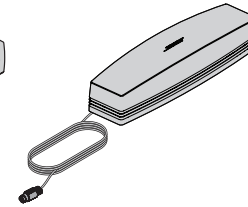

SoundTouch® wireless adapter series II

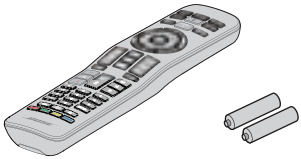

Universal remote control

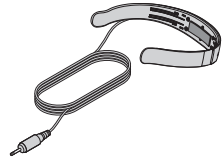

ADAPTiQ® headset

Rubber feet

May ship with multiple power cords. Use the power cord for your region.

Note: If part of the system is damaged, do not use it. Contact your authorized Bose® dealer or Bose customer service. Refer to the contact sheet in the carton.

Placement guidelines

To avoid wireless interference, keep other wireless equipment away from the system. Place the system outside of and away from metal cabinets, away from other audio/video components and away from direct heat sources.

Acoustimass® module	• Stand the Acoustimass module on its rubber feet along the same wall as your TV, or along any other wall in the front third of the room. • Choose a stable and level surface. Vibration can cause the Acoustimass module to move, particularly on smooth surfaces like marble, glass or highly-polished wood. • Make sure there is an AC (mains) outlet nearby.
Soundbar	• Place the soundbar in front of your TV. • Do not place the soundbar inside a cabinet. • Make sure there is an AC (mains) outlet nearby.
Console	• Place the console near your TV. Do NOT place the TV on top of your console. • Make sure there is an AC (mains) outlet nearby.
SoundTouch® wireless adapter	• Place the adapter 1 - 6 ft. (.3 - 1.8 m) away from the console, Acoustimass module and other wireless devices to avoid wireless interference.

Sample system placement

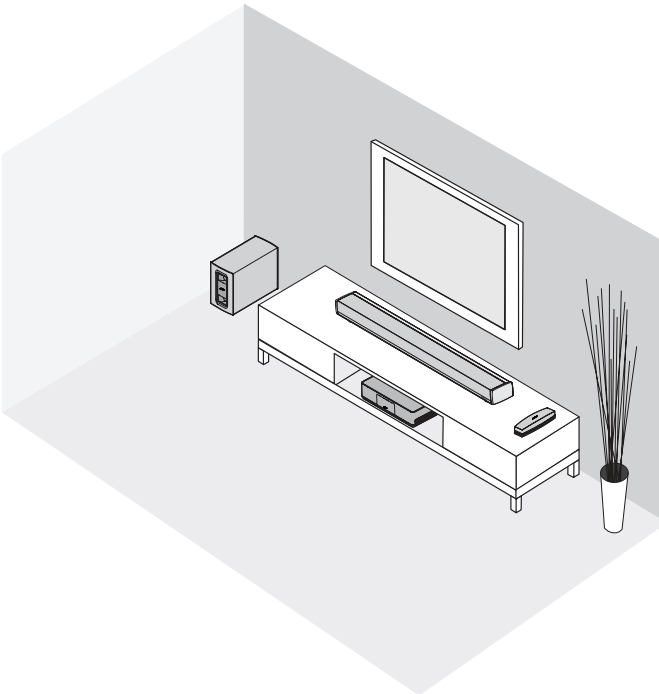

Attaching the rubber feet to the Acoustimass module

Attach the rubber feet to the Acoustimass module to protect your floor.

1. Turn the Acoustimass module upside down onto a soft surface to protect it from being damaged.
2. Attach the rubber feet to the bottom of the Acoustimass module.

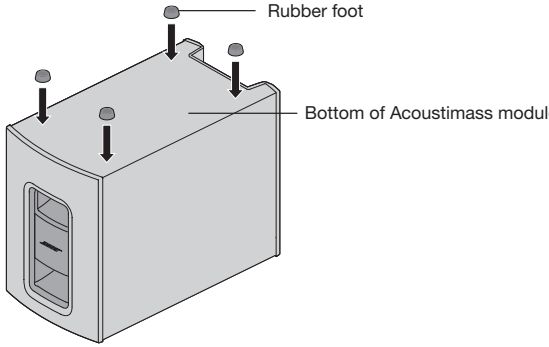

3. Place the Acoustimass module on its feet.

   Caution: Do not place the Acoustimass module on its front, back end, side or top when in use.

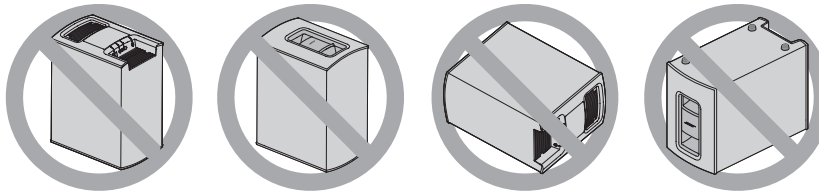

4. Remove all protective films. These may affect acoustic performance if left in place.

Connecting the Acoustimass module to power

1. Plug the power cord into the Power connector on the Acoustimass module.

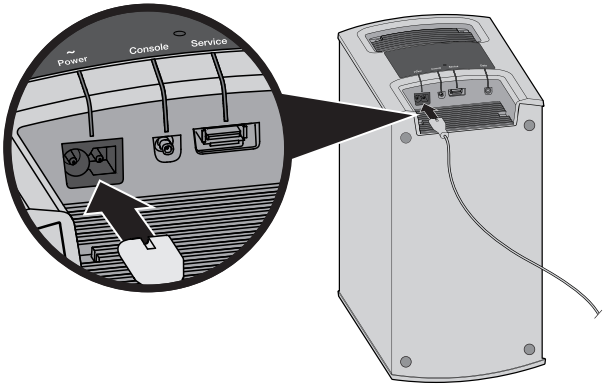

2. Plug the power cord into an AC (mains) outlet.

Connecting the console to your TV

Use your TV's HDMI connector labeled **ARC** (Audio Return Channel) if available. If your TV does not have an HDMI ARC connector, see page 14.

Using the HDMI™ ARC connector

Use the Bose® HDMI cable to connect the console to your TV.

1. Disconnect your HDMI connected sources, such as a cable/satellite box, DVD or Blu-ray Disc™ player or game system, from your TV.
2. Insert one end of the Bose® HDMI cable into the **TV (ARC)** connector on the console.

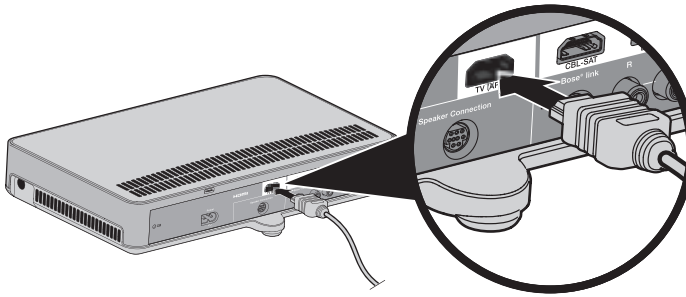

3. Insert the other end of the HDMI cable into your TV's **HDMI (ARC)** connector.

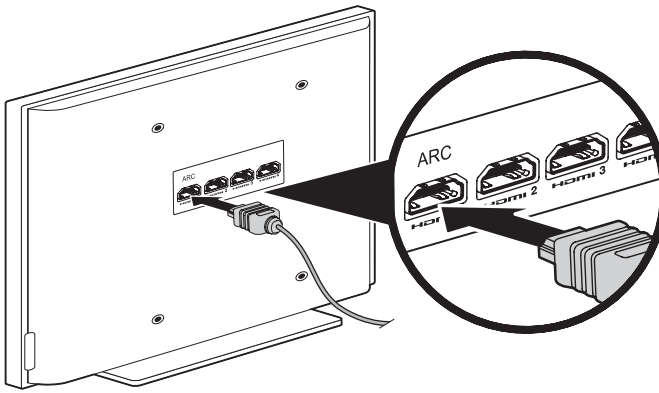

TVs without an HDMI™ ARC connector

If your TV does not have an HDMI ARC connector, you may need to make a secondary connection to the console with an optical, coaxial or analog stereo audio cable. Without this secondary connection, you may not hear audio from the Bose® system.

Use a secondary connection in the following configurations:

- You are using internal sources (such as Internet applications or an over-the-air antenna).
- You are connecting sources to your TV.

Refer to your TV owner's guide for more information.

Tip: If your TV has IN and OUT audio connector panels, use audio **OUT** for your secondary connection.

Connecting the console to other sources

Connecting to HDMI™ compatible sources

You can connect the console to other sources, such as a cable/satellite box, DVD or Blu-ray Disc™ player or game system with an HDMI cable (available separately). If your source is non HDMI compatible, see page 15 for configurations with devices that do not support HDMI.

1. Insert one end of an HDMI cable into your source's **HDMI (OUT)** connector.
2. Insert the other end of an HDMI cable into the appropriate HDMI connector on the console. For example, to connect a game system, connect an HDMI cable to the **GAME** connector.

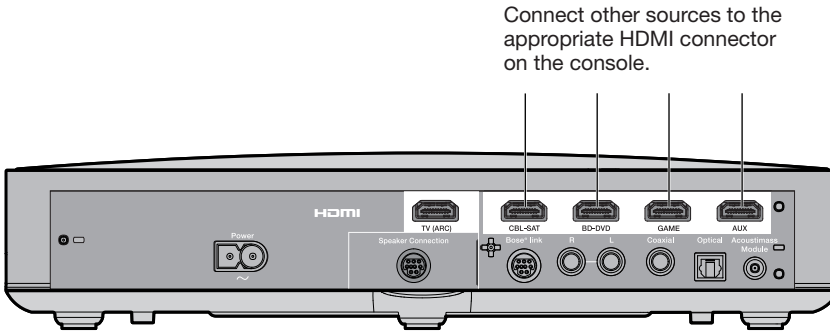

Connecting to non HDMI™ compatible sources

If your source is non HDMI compatible, connect it to your TV using audio and video cables (available separately). Refer to your TV owner's guide for more information.

Tip: If your source has IN and OUT audio connector panels, use audio **OUT**.

Connecting to audio-only sources

If your audio-only source, such as a media or CD player, is non HDMI compatible:

1. Connect your source to the console's optical, coaxial, analog or SIDE AUX ( ) connector.

   Note: You can use an optical, coaxial, analog or 3.5 mm audio cable (available separately).

2. Set the optical, coaxial, analog or SIDE AUX input for the appropriate source. You can access these settings using the System menu (see page 32).

Connecting the SoundTouch® wireless adapter

Connect the adapter to the **Bose® link** connector on the console.

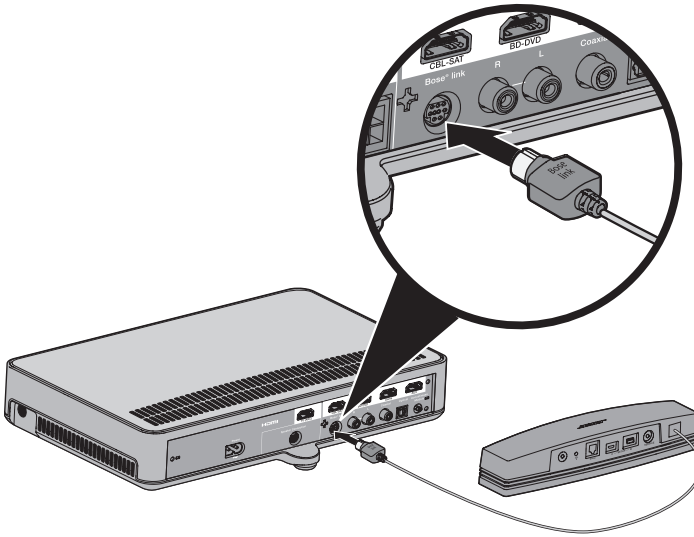

Connecting the soundbar

1. Insert one end of the speaker cable into the **Speaker Connection** connector on the console.

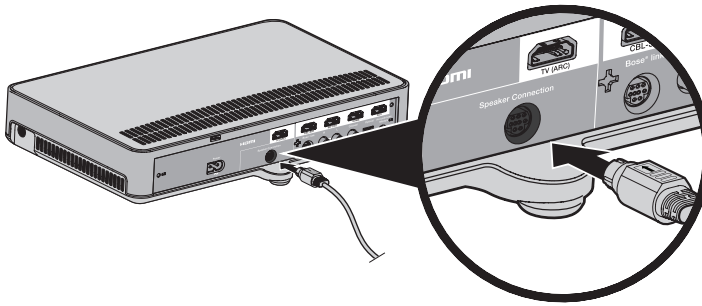

2. Insert the other end of the speaker cable into the Audio IN connector on the soundbar.

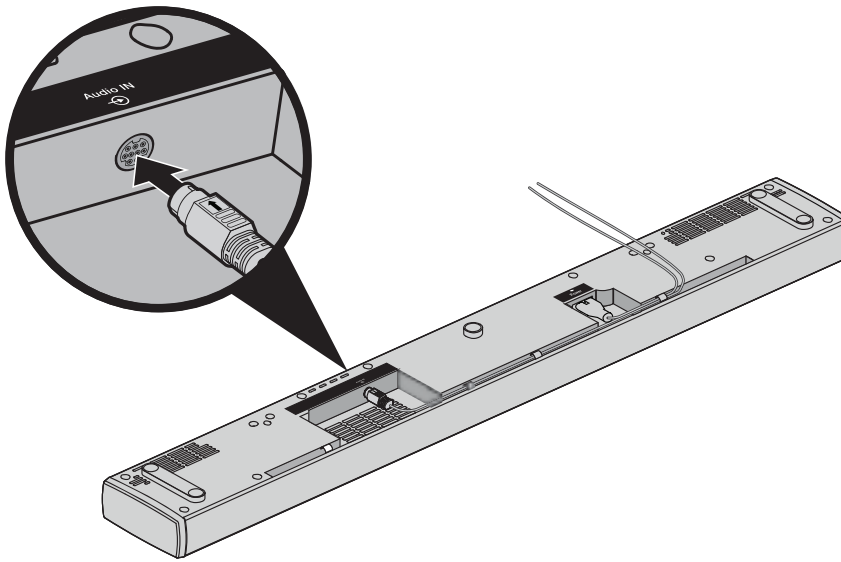

Attaching the optional extension feet to the soundbar

Attach the optional extension feet to raise the soundbar to create space underneath.

1. Turn the soundbar upside down onto a soft surface to protect it from being damaged.
2. Attach the extension feet to the bottom of the soundbar.

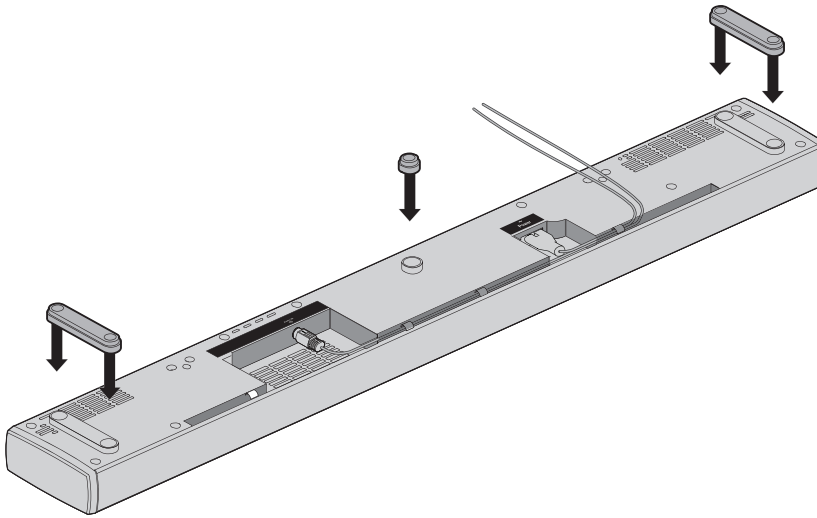

3. Place the soundbar on its feet.

Wall mounting the soundbar

You can mount the soundbar on a wall. To purchase the WB-135 Wall Mount Kit, contact your local Bose dealer or visit www.Bose.com

CAUTION: Do not use any other hardware to mount the soundbar.

Connecting the soundbar to power

1. Plug the power cord into the Power connector on the soundbar.

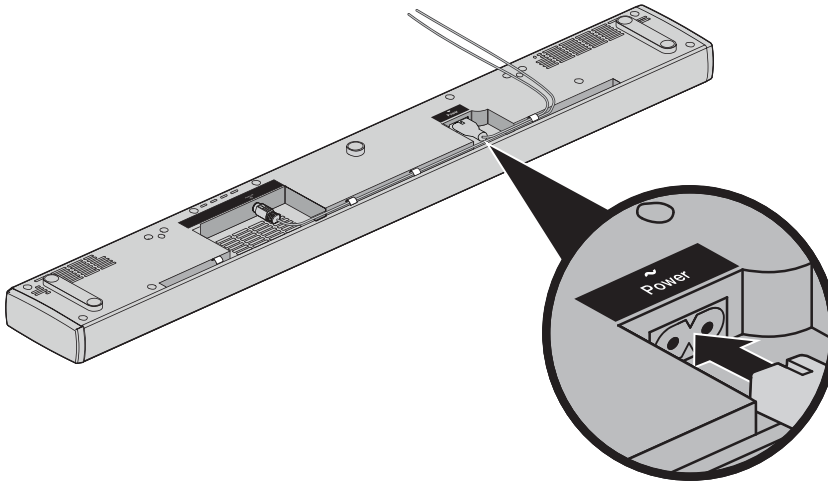

2. Plug the power cord into an AC (mains) outlet.

Connecting the console to power

1. Plug the power cord into the **Power** connector on the console.

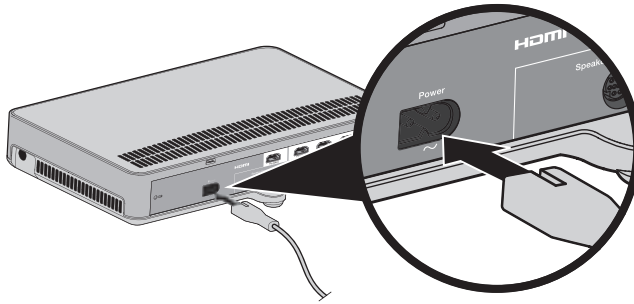

2. Plug the power cord into an AC (mains) outlet.

Installing the remote control's batteries

1. Slide open the battery compartment cover on the back of the remote control.

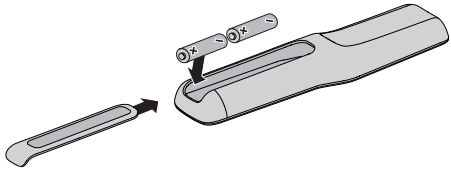

2. Insert the two provided AA (IEC-LR6) 1.5V batteries. Match the **+** and **–** symbols on the batteries with the **+** and **–** markings inside the compartment.
3. Slide the battery compartment cover back into place.

Powering on the system and selecting your language

1. Press AUDIO on the remote.
   The console powers on and **10 LANGUAGE** appears on the display.
   Note: After first time startup, the display defaults to your last used source.

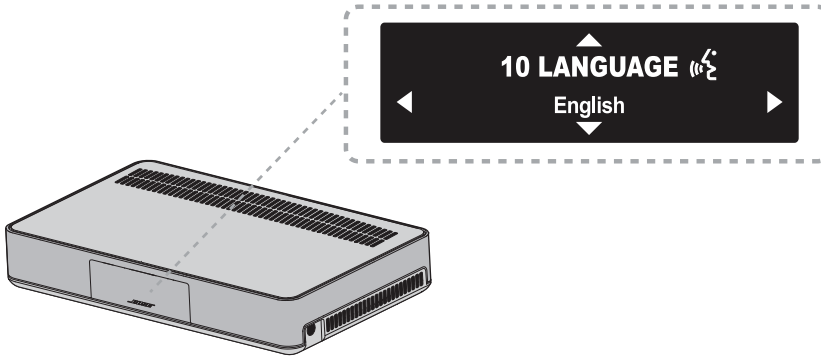

2. Press ◀ and ▶ to select your language.
3. Press EXIT.
   Tip: Look for the icon in the System menu if you select the wrong language.

The system powers off after 16 minutes of inactivity. You can disable AUTO OFF using the System menu (see page 32).

Checking for sound

1. Power on your TV.
2. If you are using a cable/satellite box or other secondary source, power on this source.

   Tip: If your secondary source is connected to your TV, select the appropriate TV input. You may need to use a different remote.
3. Power on the system.
4. Press the appropriate source button.
5. Check if sound is coming from the soundbar.
6. Press 🔇 on the remote control. Check that no sound is coming from the TV speakers.

   Note: If you hear sound coming from your TV speakers or if you do not hear sound from the Bose® speakers, see “Troubleshooting” on page 34.

Running the ADAPTiQ® audio calibration

The ADAPTiQ audio calibration customizes the sound of the system to the acoustics of your listening area by taking five audio measurements. To perform an audio calibration, you need 10 minutes when the room is quiet.

1. Put the ADAPTiQ headset on your head.

   During the ADAPTiQ audio calibration, a microphone on the top of the headset measures the sound characteristics of your room to determine optimal sound quality.

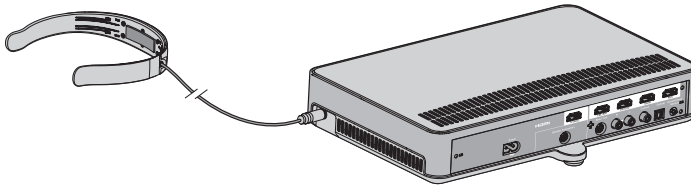

2. Insert the ADAPTiQ headset cable into the connector on the console.
3. Press SYSTEM on the remote control.
4. Press ▲ or ▼ until **14 ADAPTiQ** appears on the display.
5. Press OK.
6. Follow the voice prompts until the system completes the calibration.

   Note: If you hear an error message and are unable to complete the ADAPTiQ audio calibration, see page 37.

7. Unplug the ADAPTiQ headset from the console and store it in a safe place.

   Note: If you move or mount the system or move any furniture, run the ADAPTiQ audio calibration again to ensure optimal sound quality.

Adding the system to your Wi-Fi® network

You must download and install the SoundTouch® app onto a smartphone or tablet that is connected to your network. If you do not have a smartphone or tablet, use a computer on your network (see page 40).

The app guides you through setting up the system on your network.

Note: If you have already set up SoundTouch® for another system, see “Adding the system to an existing SoundTouch® account”.

Download and install the SoundTouch® app

If this is your first time setting up a SoundTouch® system, you must install the app.

On your smartphone or tablet, download the **Bose® SoundTouch® controller app**.

Bose® SoundTouch® controller app

- iOS users: download from the App Store
- Android™ users: download on the Google Play™ store
- Amazon Kindle Fire users: download from the Amazon Appstore for Android

Connect the system to your Wi-Fi® network

After you install the app, add the system to your network:

1. On your smartphone or tablet, tap the SoundTouch® icon to open the app.
2. Follow the instructions in the app to complete setup, including creating a SoundTouch® account, adding a music library and music services.

Adding the system to an existing SoundTouch® account

If you have already set up SoundTouch® on another system, you do not need to download the SoundTouch® app again.

1. On your smartphone or tablet, tap to open the app.
2. Select **EXPLORE > SETTINGS > Systems > ADD SYSTEM.**

   The app guides you through setup.

Remote control buttons

Use the remote to control sources connected to your system, adjust the system volume, change channels, use playback functions, enable cable/satellite box functions and navigate the System menu.

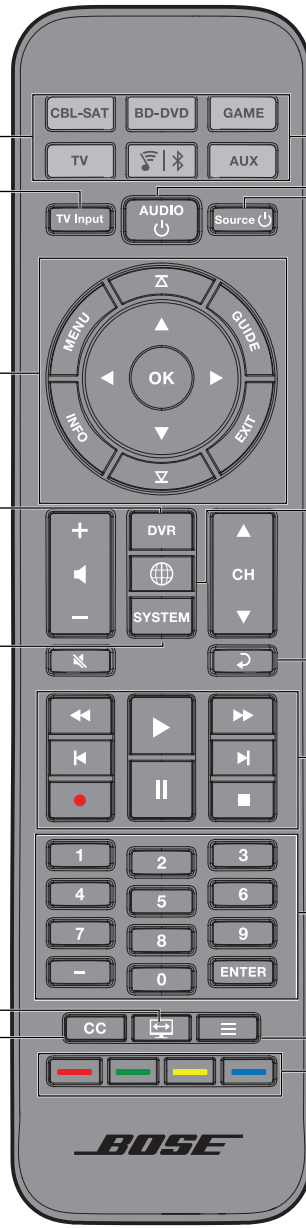

Source selection

Selects a source connected to your TV

Navigation pad

Lists recorded DVR programs

System menu

TV aspect ratio

Closed captioning

Toggles between SoundTouch®, *Bluetooth*® and SIDE AUX connector (see page 27)

Powers on/off the Bose® system

Powers on/off a selected source

Displays your TV's internet home page

Previous channel, chapter or track

Playback controls

Numeric keypad. Numbers 1-6 can play SoundTouch® Presets.

Teletext mode

Function buttons (see page 28)

Programming the universal remote control

You can use the remote to control your TV, cable/satellite box, DVD or Blu-ray Disc™ player, game system, DVR or other auxiliary source.

Consumer Electronics Control

The system supports Consumer Electronics Control (CEC). CEC allows you to control multiple HDMI™ connected sources without programming the remote. You can turn on/off CEC using the System menu (see page 32).

Your source may support CEC, but refer to it with a different name. Refer to your source owner's guide for more information.

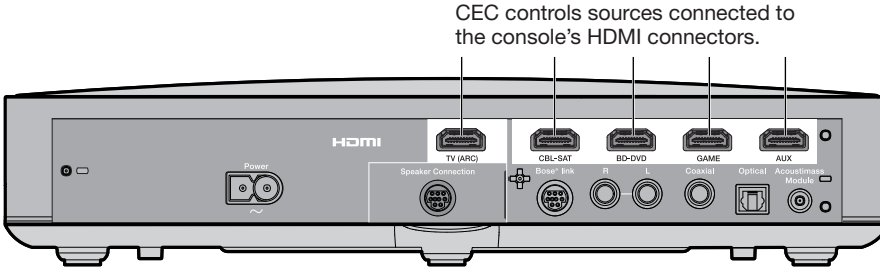

Tip: You may need to use your source or TV's system menu to enable CEC. Refer to your source owner's guide for more information.

Test your HDMI™ connected sources for CEC

If your sources successfully respond to their corresponding source buttons, you do not have to program your remote.

Note: Your HDMI connected source may not support CEC. Refer to your source owner's guide for more information.

1. Power on the Bose® system, your TV and the source you are testing.
2. Press a variety of buttons that correspond with your source's functions.
3. Press the Source button. The source powers off.

   If your source does not perform one of the functions, program the remote control to the source (see page 25).

Program the remote to control your source

If your source does not support CEC, you can program the universal remote to control your source, such as a TV, cable/satellite box, DVD or Blu-ray Disc™ player, game system or DVR, by entering the code for your source's brand. There may be several codes for your source. You may need to perform this procedure multiple times to locate the correct code.

Locate your source's code

1. Power on your source.
2. Locate the code for your source's brand in the Universal Remote Device Codes book (provided).

Enter your source's code

1. On the remote control, press and hold the appropriate source button until all six source buttons glow, then release.

   For example, to program your TV, press and hold TV until all six source buttons glow, then release.

   The appropriate source button continues to glow.
2. On the number keypad, enter the code for your source's brand and press **+** on the volume button.

Test your source's code

1. Test your source for basic functions. Follow the instructions for your source:
   - **TV**: press the channel buttons. Press MENU. The settings menu appears. Press ◀ and ▶ to navigate.
   - **Cable/satellite box**: press GUIDE. The programming guide appears. Press ◀ and ▶ to navigate.
   - **DVD or Blu-ray Disc™ player**: press GUIDE. The settings menu appears. Press ◀ and ▶ to navigate.
   - **Game system**: press ◀ and ▶ to navigate through your menu.
2. Based on your source's response to basic functions:
   - **Remote responds accurately:** press EXIT to exit programming and save your settings.
   - **Remote does not respond or does not respond accurately:**
     - **If your source button glows:** press **+** on the volume button to move to the next code. Repeat steps 1-2 in "Test your source's code". You may need to repeat this procedure 30 or more times. If all six buttons blink three times, you have cycled through all codes for your source.
     - **If your source button is off:** your remote exited programming mode. Repeat steps 1-2 in "Enter your source's code" and steps 1-2 in "Test your source's code".

Note: Your source may not be compatible with IR universal remote controls. Refer to your source's owner's guide for more information.

Source selection

You can switch between sources by pressing the appropriate source button on the remote control. Before you begin, program the remote to control your source (see page 25).

Select a source connected to the Bose® system

If your source is connected to the console and does not use CEC, set the console to the appropriate mode and turn on the source.

1. Power on the system.
2. Press the button for the source you want to control.

   The source button glows.
3. Press [Source ⏻].

   The source powers on.

Select a source connected to your TV

If your source is connected to your TV, select the appropriate TV input.

1. Power on the system, your TV and the appropriate source.
2. Press [TV Input] to select the input on your TV.

   You may need to press [TV Input] several times to select the TV input for the source.

   On some TVs, [TV Input] displays a menu. Use the remote control to choose the TV input and close this menu.

Universal source buttons and console connectors

The source buttons on your remote control correspond with the connectors on the back of the console. For example, [BD-DVD] corresponds with the **BD-DVD** HDMI™ connector.

Your source buttons work with any source that is connected to the corresponding connector. If you have a secondary DVD or Blu-ray Disc™ player and connect it to the **CBL-SAT** connector, it can be programmed to work with [CBL-SAT].

Note: Ensure you are using the remote code appropriate for the source rather than the corresponding connector label when programming the remote.

Using the button

This button enables you to play music on your system.

- Access the SoundTouch® source on your system
- Stream music from a connected *Bluetooth*® device
- Access the SIDE AUX connector to connect an audio device.

Press to toggle between SoundTouch® ( ), *Bluetooth* ( ) and the SIDE AUX ( ) sources.

SoundTouch®

You can control a subset of SoundTouch® features on your system such as playback controls and Presets. See “Using SoundTouch®” on page 29.

Bluetooth wireless technology

Your system has *Bluetooth* wireless technology which lets you stream music from *Bluetooth* devices to your system. Your system stores up to eight previously connected devices in its pairing list (see page 30).

SIDE AUX

The SIDE AUX connector is a 3.5 mm connector located on the side of the console. When set as a connector for an audio in source, the connector can be accessed through the toggle.

See “5 SIDE AUX” on page 32 for information on how to change the connector settings.

Adjusting the volume

On the remote control:

- Press **+** to increase the volume.
- Press **–** to decrease the volume.
- Press 🔇 to mute or unmute the audio.

Note: If you hear sound coming from your TV, see “Troubleshooting” on page 34.

Function buttons

The red, green, yellow and blue buttons on the remote control correspond with the color-coded function buttons on your cable/satellite box, Blu-Ray Disc™ player or teletext functions.

- Cable/satellite box or Blu-Ray Disc™ player functions: refer to your cable/satellite box owner’s guide.
- Teletext functions: correspond with color-coded page numbers, headings or shortcuts on a teletext display.

Programming a non-Bose® remote control

You can program a non-Bose remote control, such as your cable/satellite box remote, to control the system. Refer to your non-Bose remote control owner’s guide or cable/satellite website for instructions.

Once programmed, the non-Bose remote controls basic functions such as power on/off and volume.

Accessing SoundTouch®

After you create a SoundTouch® account, you are ready to enjoy SoundTouch® on your system. You can access SoundTouch® through the SoundTouch® app or by pressing on your remote control.

For more information on using SoundTouch®, download the SoundTouch® wireless adapter series II owner's guide from SoundTouch.com

Using the SoundTouch® app

The SoundTouch® app is a software application that enables you to set up and control SoundTouch® from your smartphone, tablet or computer. Using the app, your smart device acts as a rich remote for the SoundTouch® source.

- Easily personalize Presets to your favorite music.
- Explore Internet radio, music services and your music library.
- Manage SoundTouch® system settings.

Using the SoundTouch® source

Once you have set up SoundTouch®, you can use the remote to control a subset of features on your system:

- Personalize and play Presets using numbers 1-6 on the numeric keypad.
- Control playback (play, pause, stop, skip to the next track, etc.).

To start SoundTouch®

Press on your remote.

A SoundTouch® message appears on the display.

Getting help

SoundTouch.com

Provides access to the owner support center, which includes: owner's manuals, articles, tips, tutorials, a video library and the owner community where you post questions and answers.

Open a browser and go to: **SoundTouch.com**

In-app help

Provides help articles for using SoundTouch®.

1. On your device, select to open the app.
2. Select **EXPLORE** > **HELP**.

Pairing a *Bluetooth*® device

Bluetooth® wireless technology enables you to stream music from *Bluetooth* smartphones, tablets, computers or other audio devices to your SoundTouch® system.

Before you can stream music from a *Bluetooth* device, you must pair the device with your system.

1. On the remote control, press and release until a *Bluetooth* pairing message appears on the display.

   Note: Each time you press the system toggles between SoundTouch® ( ), *Bluetooth* ( ) and the SIDE AUX ( ) connector.

   Make sure you see a *Bluetooth* pairing message on the display before you pair your device.

2. On your *Bluetooth* device, turn on the *Bluetooth* feature.

   Tip: The *Bluetooth* feature is usually found in Settings. A gear icon ( ) often represents Settings on the Home screen.

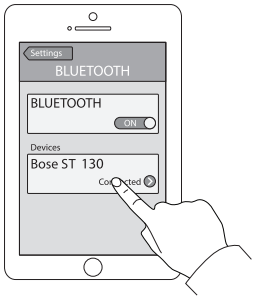

3. Select your SoundTouch® system from the device list.

   Once paired, your SoundTouch® system's name appears connected in the device list.

4. On the *Bluetooth* device, play music.

If you cannot pair your device

You may need to clear the system's *Bluetooth* pairing list (see "Troubleshooting" on page 34). After you clear the list, try pairing again.

Connecting to a paired *Bluetooth®* device

You can stream audio from a *Bluetooth®* device to your system. If there are multiple devices stored in the system's pairing list, it may take a minute or two for the paired device to connect. Your system's display indicates connection status.

Using the button

To play music from another paired device, you must connect to the device using the button button or the app.

If there are multiple paired devices within range, your system connects to the most recent paired device that streamed to it.

1. On the system's remote control, press and release until a *Bluetooth* searching message appears on the display.

   The system connects to the most recent paired device within range of your system. If that device is not withinin range, the system goes through its list of paired devices until it finds the available device.

2. On the device, play music.

Note: If a *Bluetooth* device is connected to your system and you want to connect to a different *Bluetooth* device, see "Pairing a Bluetooth® device" on page 30.

Using the *Bluetooth* feature on the paired device

1. On the *Bluetooth* device, turn on the *Bluetooth* feature.
2. Select your SoundTouch® system from the device list.
3. Once connected, play audio on the *Bluetooth* device to stream to your system.

Using the System menu

Use the System menu to adjust audio levels, turn on/off features (such as AUTO OFF), change the language, set the coaxial, analog and optical inputs for a particular source, run the ADAPTiQ® audio calibration, pair your Acoustimass® module with the console or factory reset the system.

1. Press SYSTEM on the remote.
2. Press ▲ and ▼ to scroll through the System menu.
3. Press ◀ and ▶ to adjust the settings.
4. Press EXIT.

Display	System state
1 AUDIO COMP	**Off**: (Default) No change to audio track. **Enhance dialogue**: Increases the level of dialogue and sound effects at low volume settings while providing full audio impact at high volume settings. **Smart volume**: Reduces the range of volume levels in a movie soundtrack so the difference between extremely loud outbursts and soft sounds is less noticeable. **Note:** Enhance dialogue and smart volume features are not available for SoundTouch®, *Bluetooth*® or devices connected to the 🎧 connector.
2 AUDIO/VIDEO SYNC	Adjusts the audio delay to synchronize audio and video.
3 HDMI-CEC	**Default On**: (Default) Enables CEC (see page 24). **Alternate On:** Prevents unintended source switching and may fix CEC inconsistencies (see page 35). **Off**: Disables CEC.
4 AUTO OFF	**Enable:** (Default) The system powers off after 16 minutes of inactivity (no sound coming from the system). **Disable**: The system will not automatically power off.
5 SIDE AUX	**Audio in**: Sets the 🎧 connector for an auxiliary source. **Headphones**: (Default) Sets the 🎧 connector as a headphone output. **Note:** If set to **Headphones** and a cable is connected, the soundbar is muted. Disconnect your headphones when not in use.
6 BASS LEVEL	Adjusts bass level.
7 TREBLE LEVEL	Adjusts treble level.

Display	System state
8 CENTER LEVEL	Increases or decreases the level of dialogue for movies and TV.
9 SURROUND LEVEL	NOT AVAILABLE.
10 LANGUAGE	Changes the language on the console and the ADAPTiQ audio calibration.
11 SET OPTICAL INPUT	Sets the optical connector to Auto/TV (Default), CBL SAT, BD DVD, GAME or AUX source.
12 SET COAXIAL INPUT	Sets the coaxial connector to Auto/TV (Default), CBL SAT, BD DVD, GAME or AUX source.
13 SET ANALOG INPUT	Sets the analog connector to Auto/TV (Default), CBL SAT, BD DVD, GAME or AUX source.
14 ADAPTIQ	Starts the ADAPTiQ audio calibration process.
15 PAIR ACOUSTIMASS	Reconnects the Acoustimass® module to the system.
16 FACTORY RESET	Sets the System menu and the ADAPTiQ audio calibration to the factory settings.

Error messages

Display	System state
ERROR **Cannot find Acoustimass**	The Acoustimass® module is not connected to the console.
ERROR **Cannot find soundbar**	The soundbar is not connected to the console.
<SOURCE> **No signal**	The source is not connected to the console, or the source is connected to the console and powered off.
SIDE AUX **Nothing connected**	The source is not connected to the connector on the console.
ERROR **Call Bose**	Call Bose® customer service. Refer to the contact sheet in the carton.

Acoustimass® module status indicator

The status indicator on the back of the Acoustimass module provides information on system activity.

Indicator activity	Acoustimass module state
Amber	Connected to the console.
Blinking amber	Disconnected from the console.
Slow blinking amber	Available to make a wireless connection to the console.
Red	System error.

Troubleshooting

Problem	What to do
No power	• Secure the Acoustimass® module's, soundbar's and console's power cords. • Reconnect the Acoustimass module's, soundbar's and console's power cords firmly into an AC (mains) outlet. • Use the remote control to power on the system.
No sound	• Unmute the system. • Increase the volume. • Plug the Acoustimass module, soundbar and console into a live AC (mains) outlet. • Insert the speaker cable into the **Speaker Connections** connector, not the **Bose® link** connector. • Insert the HDMI™ cable into a connector on your TV labeled **ARC** or **Audio Return Channel**. If your TV does not have an HDMI ARC connector, use a secondary audio cable in addition to the HDMI cable (see page 14). • If using a secondary audio cable, insert the cable into a connector on your TV labeled **Output** or **OUT**, not Input or IN. • Secure all cable connections on the soundbar, TV and connected sources. • If your source is connected to your TV, select the correct TV input (see page 26). • Toggle CEC between Alternate On and Default On (see page 32). • Disconnect headphones when not in use. • If connecting your source through the connector, enable **Audio in** using the System menu (see page 32). • If you are connecting headphones to the connector, enable **Headphones** using the System menu (see page 32). • If you see the error message **Cannot find Acoustimass**, pair the Acoustimass module with the console (see page 37). • Reset the system (see page 38).
Sound is coming from your TV speakers	• Insert the HDMI cable into a connector on your TV labeled **ARC** or **Audio Return Channel** (if available). • Turn off your TV speakers (refer to your TV owner's guide). • Decrease your TV volume to its lowest setting.
No or poor video	• Switch to a different source, then return to the affected source to try and re-establish a signal. • Disconnect and reconnect the HDMI cable of the affected source. • Disconnect and reconnect the HDMI cable from the console to the TV. • Power off and on the affected source, TV and the console. • If you assigned the optical, analog or coaxial digital connector to one of your HDMI™ sources, change it back to Auto/TV (Default) using the System menu (see page 32).

Problem	What to do
Remote control is inconsistent or does not work	• Match the **+** and **–** symbols on the batteries with the **+** and **–** markings inside the compartment (see page 19). • Replace the battery (see page 19). • Press the volume button on the remote control and see if the correct source button flashes. • Remove the protective film from the console. • Reset your source button (see page 38). • If using CEC: - Point the remote control at the console. - Use the Alternate On setting (see page 32). - Disable CEC on your system (see page 32) and program the remote to control your source (see page 25). • If you have programmed the remote to control your source: - Point the remote control at the appropriate source. - Ensure you have entered the correct code for your source's brand. - Program the remote with another code (see page 25).
System does not sync with the correct source / selects the incorrect source after delay (CEC)	• Use the Alternate On setting (see page 32). • Disable CEC on your source (refer to your source owner's guide for more information). • Disable CEC on your system (see page 32) and program the remote to control your source (see page 25).
CEC inconsistent or does not work	• Use the Alternate On setting (see page 32). • Disable CEC on your source (refer to your source owner's guide for more information). • Disable CEC on your system (see page 32) and program the remote to control your source (see page 25).
Poor or distorted sound	• Remove all protective films from the system. • Secure all cable connections on the soundbar, TV and connected sources. • If you see the error message **Cannot find Acoustimass**: - Plug in the Acoustimass® module. - Pair the Acoustimass module with the console (see page 37). • If using the analog or connector, decrease the volume on your source. • Factory reset the system (see page 38) and run the ADAPTiQ® audio calibration (see page 21).

Problem	What to do
Intermittent or no audio	• Move system away from potential interference, such as a wireless router, cordless phone, television, microwave, etc. • Stop other audio or video streaming applications. • Move mobile device closer to the system and away from interference or obstructions. • Move system or mobile device closer to router or access point. • Unmute or increase volume. • Unplug the power cord; reconnect after one minute. • Secure all cable connections on the soundbar, TV and connected sources. • Toggle CEC between Alternate On and Default On (see page 32).
Cannot complete network setup	• Connect the system to AC (mains) power. • Select correct network name and enter password. • Connect the device and SoundTouch® system to the same Wi-Fi® network. • Place the wireless adapter within range of the router. • Enable Wi-Fi on the device (mobile or computer) you are using for setup. • Close other open applications. • If using a computer for setup, check firewall settings to ensure that the SoundTouch® app and SoundTouch® Music Server are allowed programs. • Test your Internet connection by loading www.SoundTouch.com • Restart your mobile device, or computer and router. • Uninstall the app, reset the adapter and restart setup.
Cannot play *Bluetooth*® audio	On your system: • Set up SoundTouch® first and perform all system updates. • Pair a device (see page 30). • Try pairing a different device. • See “No sound”. • Clear the system’s pairing list using the SoundTouch® app: - Go to **EXPLORE > SETTINGS > Systems** and select your SoundTouch® system. - Open the *Bluetooth* item and clear the pairing list. On your mobile device: • Disable and re-enable the *Bluetooth* feature. • Remove the system from the *Bluetooth* menu. Pair again. • Refer to your *Bluetooth* device’s documentation. • See “Intermittent or no audio”.

If your console cannot find the Acoustimass® module

The Acoustimass module and console are paired at the factory. However, if you see the error message **Cannot find Acoustimass** on the display, perform this pairing procedure:

1. Unplug the Acoustimass module.
2. Press SYSTEM on the remote control.
3. Press ▼ until **15 PAIR ACOUSTIMASS** appears on the display.
4. Press OK.
   Plug in Acoustimass appears on the display.
5. Plug the AC power cord into an AC (mains) outlet.

   After the Acoustimass module connects to the console, **Pairing complete** appears on the display.

   Note: For alternate connection options due to excessive wireless interference, contact customer service.

ADAPTiQ® audio calibration error messages

Listen to the voice prompts for the following error messages:

Error message	Problem	What to do
1	The microphone on the ADAPTiQ headset cannot detect sound.	• Secure all speaker cables. • Ensure the microphone opening on the top of ADAPTiQ headset is not blocked. • Your ADAPTiQ headset may be damaged. Call Bose® customer service for replacement parts. Refer to the contact sheet in the carton.
2	The room is too loud.	Restart the ADAPTiQ audio calibration when the room is quiet.
3	The ADAPTiQ headset is too close to the speakers.	Move the ADAPTiQ headset farther away from the speakers.
4	The listening locations are too similar.	Move 1 - 2 ft. (.3 - .6 m) away from your previous listening location.
5	The ADAPTiQ headset cannot take measurements due to movement.	Hold your head still.

After correcting your problem, you must restart the ADAPTiQ audio calibration (see page 21). If you hear a different error message, call Bose customer service for further instructions. Refer to the contact sheet in the carton.

Factory reset the system

To troubleshoot problems, reset the System menu and the ADAPTiQ® audio calibration to the factory settings.

1. Press SYSTEM on the remote control.
2. Press ▼ until **16 FACTORY RESET** appears on the display.
3. Press **5**.

   The system resets.
4. Select your language (see page 19).
5. Run the ADAPTiQ audio calibration (see page 21).

Reset a source button on the remote control

If you are experiencing problems with a source button on the remote control, reset the source button to the factory settings.

After performing this procedure, your source button is in CEC mode.

1. On the remote control, press and hold the appropriate source button until all six source buttons glow, then release.

   Only the appropriate source button glows.
2. On the number keypad, enter **0140**.

Service connectors on the Acoustimass® module

The Service and Data connectors are for service use only. Do not insert any cables into these connectors.

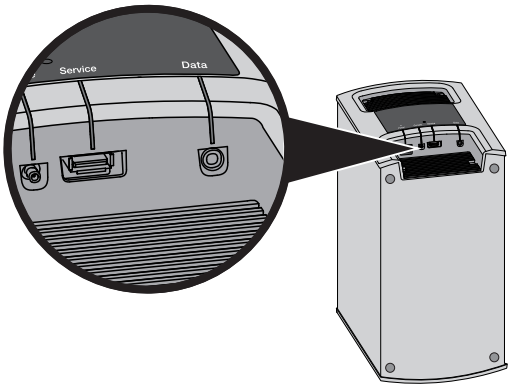

Cleaning

Clean the surface of the system with a soft, dry cloth.

- Do not use any sprays near the system. Do not use any solvents, chemicals or cleaning solutions containing alcohol, ammonia or abrasives.
- Do not allow liquids to spill into any openings.

Customer service

For additional help using the system:

- Visit SoundTouch.com
- Contact Bose® customer service. Refer to the contact sheet in the carton.

Limited warranty

Your SoundTouch® system is covered by a limited warranty. Details of the limited warranty are provided on the quick start guide in the carton. Please refer to the quick start guide for instructions on how to register. Failure to do so will not affect your limited warranty rights.

The warranty information provided with this product does not apply in Australia and New Zealand. See our website at www.bose.com.au/warranty or www.bose.co.nz/warranty for details of the Australia and New Zealand warranty.

Technical information

Acoustimass® module
Power rating: 100-240V ∿ 50/60Hz 150W

Console
Power rating: 100-240V ∿ 50/60Hz 60W

Soundbar
Power rating: 100-240V ∿ 50/60Hz 60W

Appendix: Using a Computer for Setup

Important setup information

- You can set up your system using a computer rather than a smartphone or tablet.
- Use a computer that is on your Wi-Fi® network.
- Use a computer where your music library is stored.
- You need the provided USB cable.*
- Do not connect the USB cable until the app instructs you to connect the cable.

** The SETUP A USB connector on the back of the system is for computer setup only. The USB connectors are not designed to charge smartphones, tablets or similar devices.*

Using a desktop computer for setup

If you are using a desktop computer, move the console and SoundTouch® wireless adapter near the computer to set up your system. During setup, the app prompts you to connect the USB cable from the computer to the wireless adapter (temporarily).

After setup, disconnect the USB cable and the console from your computer and from AC (mains power) and move the system to its permanent location.

Setting up the system using a computer

1. On your computer, open a browser and go to:

   SoundTouch.com/app

   Tip: Use the computer where your music library is stored.
2. Download and run the SoundTouch® app.
3. Connect the system to your home network (see page 22).

   The app guides you through setup.

759890-0010

©2017 Bose Corporation, The Mountain,
Framingham, MA 01701-9168 USA
AM759890 Rev. 01