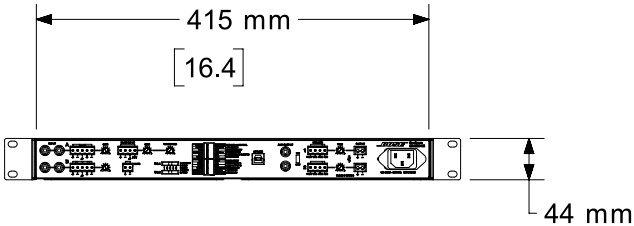

BACK VIEW

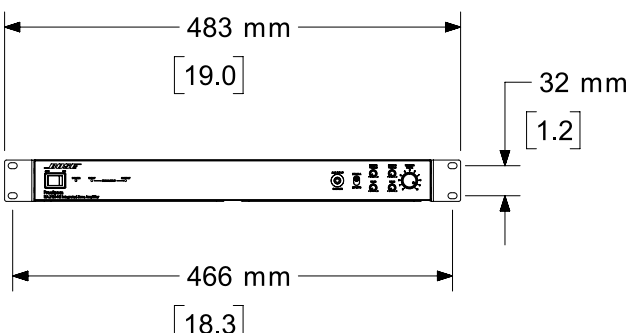

FRONT VIEW

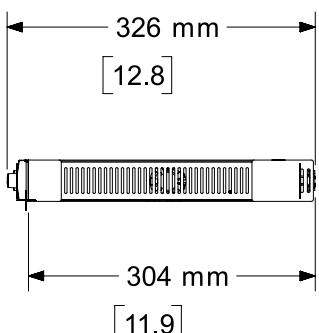

RIGHT VIEW