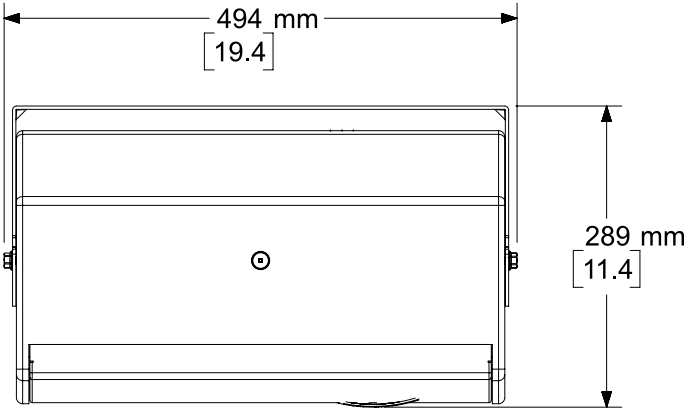

Top View

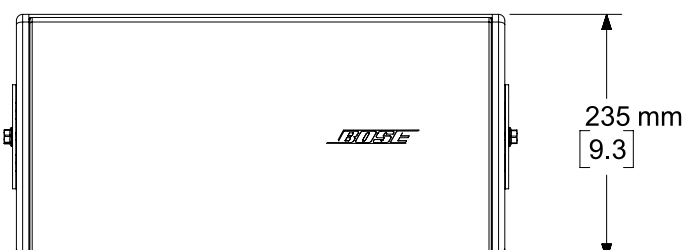

Front View

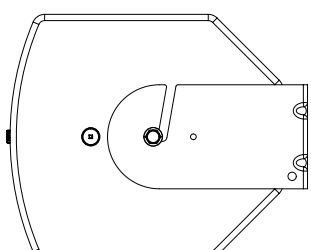

Right View